Comfort-Aire® Century®

SE Series

Single-Stage Multi-Position Gas Furnace

80%

GFM80S120D5S1A

Parts List

517.787.2100

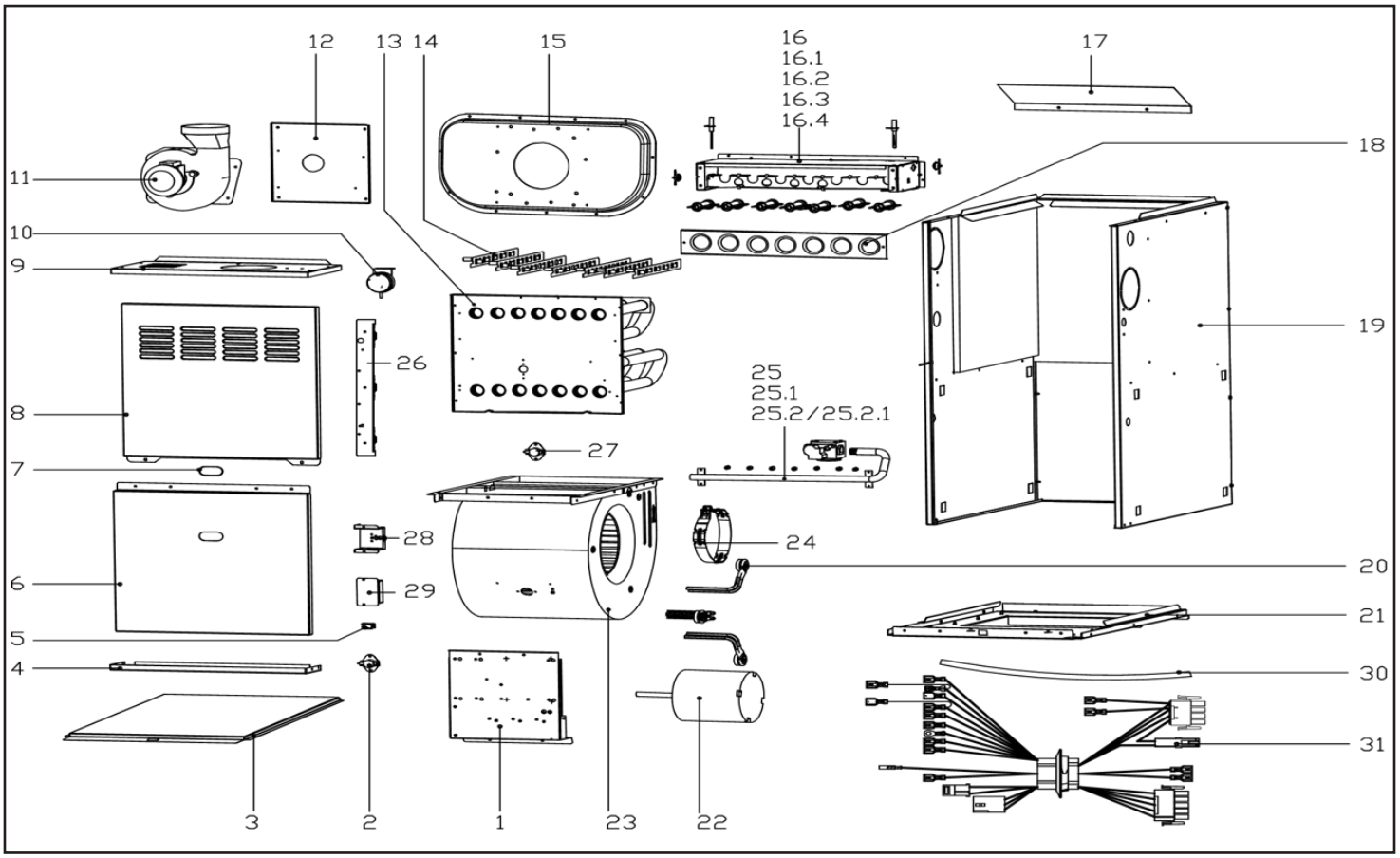
12
13 14
15
16
16.1
16.2
16.3
16.4
17
18
11
10
9
19
26
25
25.1
25.2/25.2.1
8
27
7
28
24
20
6
29
21
5
4
30
31
3
2
1
23
22

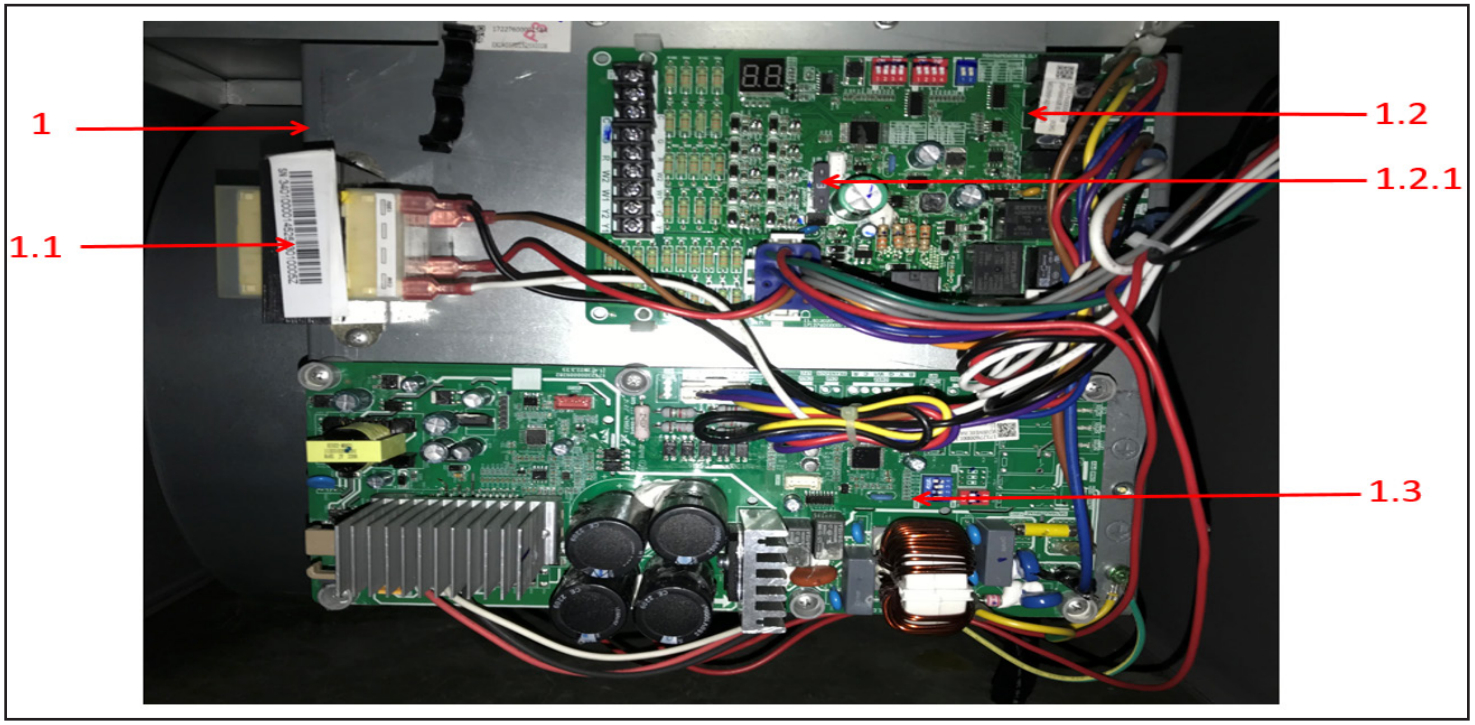
1
1.1
1.2
1.2.1
1.3

EX_ID	Spare Parts Code	Part Name(EN)	Qty.	Recommend store spare parts
1	17227600001584	E-part box assembly	1	YES
1.1	11203103000197	Linear Transformer	1	
1.2	17127600000708	Tie-in assembly of main control board	1	YES
1.2.1	11203001001353	Fuse	1	YES
1.3	17127600A00061	Gas furnace, Main control board assembly	1	YES
2	17400513002815	Temperature switch	1	
3	12227600000099	Sealing plate	1	
4	12227600002725	Support plate assembly	1	YES
5	17427600001148	Door switch	1	
6	12227600002072	Cover	1	
7	12127600000009	Plastic cover	1	
8	12227600002070	Cover	1	
9	12227600002165	Cover assembly	1	YES
10	11201008000002	Pressure sensor	1	YES
11	17400801000223	Exhaust fan ass'y	1	
12	12227600000242	Exhaust baffles	1	
13	15727600000007	Heat exchanger ass'y	1	
14	12227600000058	Spoiler	7	
15	12227600000237	Gas-collecting hood	1	
16	12227600002760	Burner Components	1	YES
16.1	11201006000010	Special sensor	1	YES
16.2	17427600000007	Firing pin	1	YES
16.3	17400513000045	Thermostat	2	
16.4	17427600000005	Burner	7	
17	12227600000021	Duct damper	1	
18	12227600000232	Deflector	1	
19	12227600002089	Cabinet Components	1	
20	12223000001932	Supporter subassembly of fan motor	3	
21	12227600000215	Partition board ass'y	1	YES
22	11002015016398	Brushless DC Motor	1	YES
23	12200102000030	Centrifugal fan	1	
24	12223000001992	Supporter of fan motor	1	
25	15427600000102	Gas Components	1	YES
25.1	17427600001389	Gas Valve	1	
25.2	15427600000104	Gas Components	1	YES
25.2.1	15527600000003	Copper nozzle	7	
26	12227600002720	Support plate assembly	2	YES
27	17400513003815	Temperature switch	1	
28	12227600000818	Junction box	1	
29	12227600000817	Junction box cover	1	
30	12627600000010	Silicone tube	1	
31	17401203023509	Strong electric cable group	1	

Due to ongoing product improvements, specifications and dimensions are subject to change and correction without notice or incurring obligations. Determining the application and suitability for use of any product is the responsibility of the installer. Additionally, the installer is responsible for verifying dimensional data on the actual product prior to beginning any installation preparations.

Incentive and rebate programs have precise requirements as to product performance and certification. All products meet applicable regulations in effect on date of manufacture; however, certifications are not necessarily granted for the life of a product. Therefore, it is the responsibility of the applicant to determine whether a specific model qualifies for these incentive/rebate programs.

1900 Wellworth Avenue • Jackson, MI 49203 • 517-787-2100

3/2026